Electrolux

Factory Parts Catalog

Product No.	EI23CS55GB0	EI23CS55GB1	EI23CS55GS0	EI23CS55GS1	EI23CS55GW0	EI23CS55GW1
Series	counter depth	counter depth	counter depth	counter depth	counter depth	counter depth
Color	black	black	stainless	stainless	white	white
Volts	115	115	115	115	115	115
Wiring Diagram	241912901	241912901	241912901	241912901	241912901	241912901
Owner's Guide	241868900	241868900	241868900	241868900	241868900	241868900
Market	North America	North America	North America	North America	North America	North America
Energy Guide	241768192	241768192	241768192	241768192	241768192	241768192
Service Data Sheet	241868702	241868702	241868702	241868702	241868702	241868702

Electrolux

Electrolux Major Appliances
P.O. BOX 8020
CHARLOTTE, NC 28262

This Catalog replaces 5995515623

Publication No.
5995605879
12/01/05
(EN/SERVICE/JLH)
137

SIDE-BY-SIDE REFRIGERATOR

Model No.
EI23CS55G

FREEZER DOOR

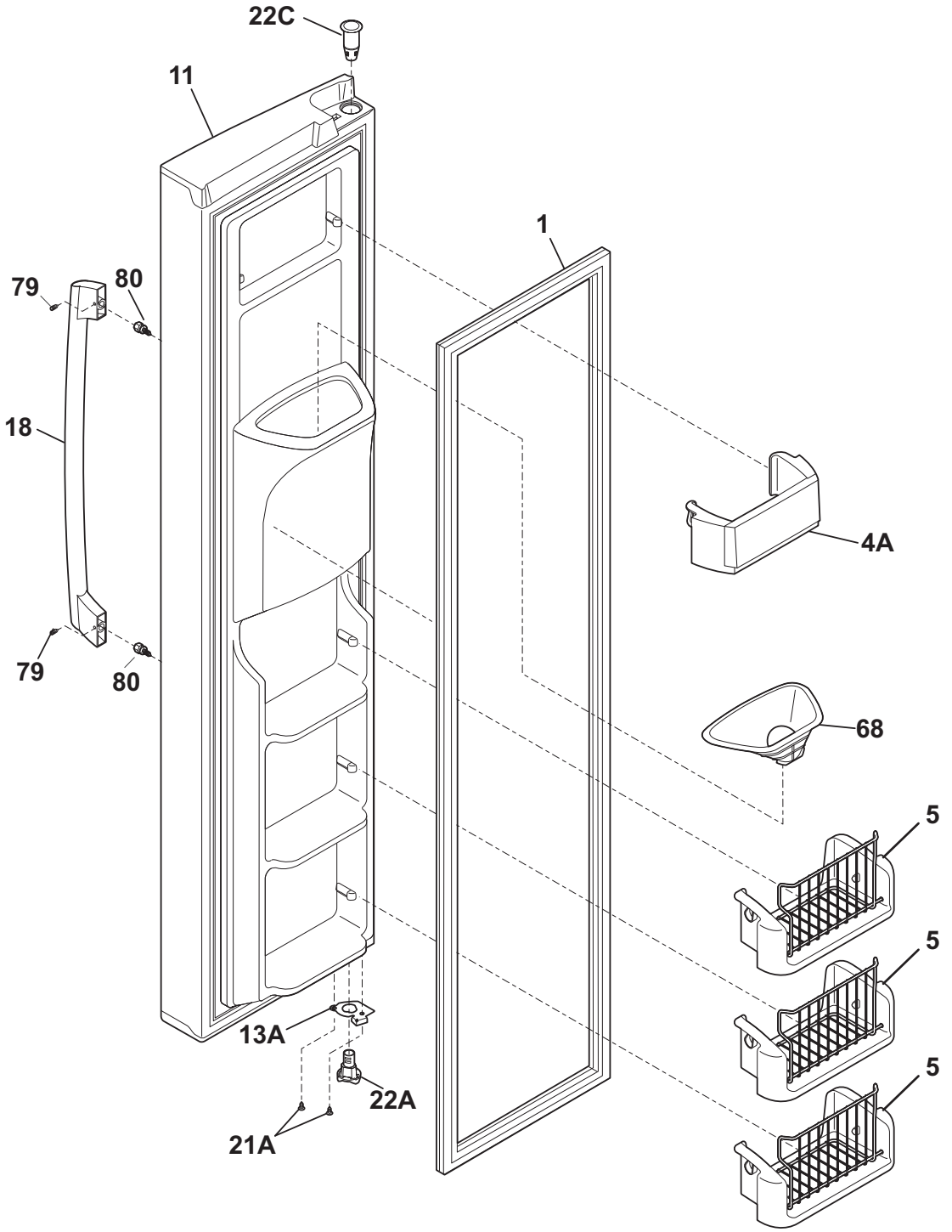

E58FRDEEC0

FREEZER DOOR

Model Index:
A EI23CS55G (EI23CS55GB0)
B EI23CS55G (EI23CS55GB1)
C EI23CS55G (EI23CS55GS0)
D EI23CS55G (EI23CS55GS1)
E EI23CS55G (EI23CS55GW0)
F EI23CS55G (EI23CS55GW1)

POS. NO	PART NO.							DESCRIPTION
1 #	241510204	A	B	-	-	-	-	Gasket-frzr door, black, magnetic
1 #	241510202	-	-	C	D	E	F	Gasket-frzr door, white, magnetic
4A	241752301	A	B	C	D	E	F	Bin-door, frzr-upper
5	241545007	A	B	C	D	E	F	Bin-tilt out, tilt-out
11	241837122	A	B	-	-	-	-	Door-frzr, black, complete assy
11	241837123	-	-	C	D	-	-	Door-frzr, stainless, complete assy
11	241837121	-	-	-	-	E	F	Door-frzr, white, complete assy
13A	241942602	A	B	C	D	E	F	Door Stop
18	241761011	A	B	-	-	-	-	Handle-door, (2)
18	241761010	-	-	C	D	-	-	Handle
18	241761012	-	-	-	-	E	F	Handle-door
18*	241601002	A	B	C	D	E	F	Wrench, allen
21A	240442706	A	B	C	D	E	F	Screw-#10-32 X 3/4, zinc
22A	241760502	A	B	C	D	E	F	Bearing-hinge, black, lower
22C	241760402	A	B	-	-	-	-	Bearing, hinge, top
22C	241760401	-	-	C	D	E	F	Bearing, hinge, top
68	241908801	A	B	C	D	E	F	Chute-ice
79	218755401	A	B	C	D	E	F	Screw-set, 10-32 x 0.375
80	218755504	A	B	C	D	E	F	Screw-shoulder, #10 AB, handle mounting
*	240352102	A	B	C	D	E	F	Connector-water, straight
*	241834701	A	B	C	D	E	F	Harness-wiring, door
*	240451503	A	B	C	D	E	F	Screw, ind hex wshr hd, 8-32 x 0.375, trilobe
*	5303918371	A	B	C	D	E	F	Dispenser heater kit, 115

Functional Parts
* Non-Illustrated Parts

REFRIGERATOR DOOR

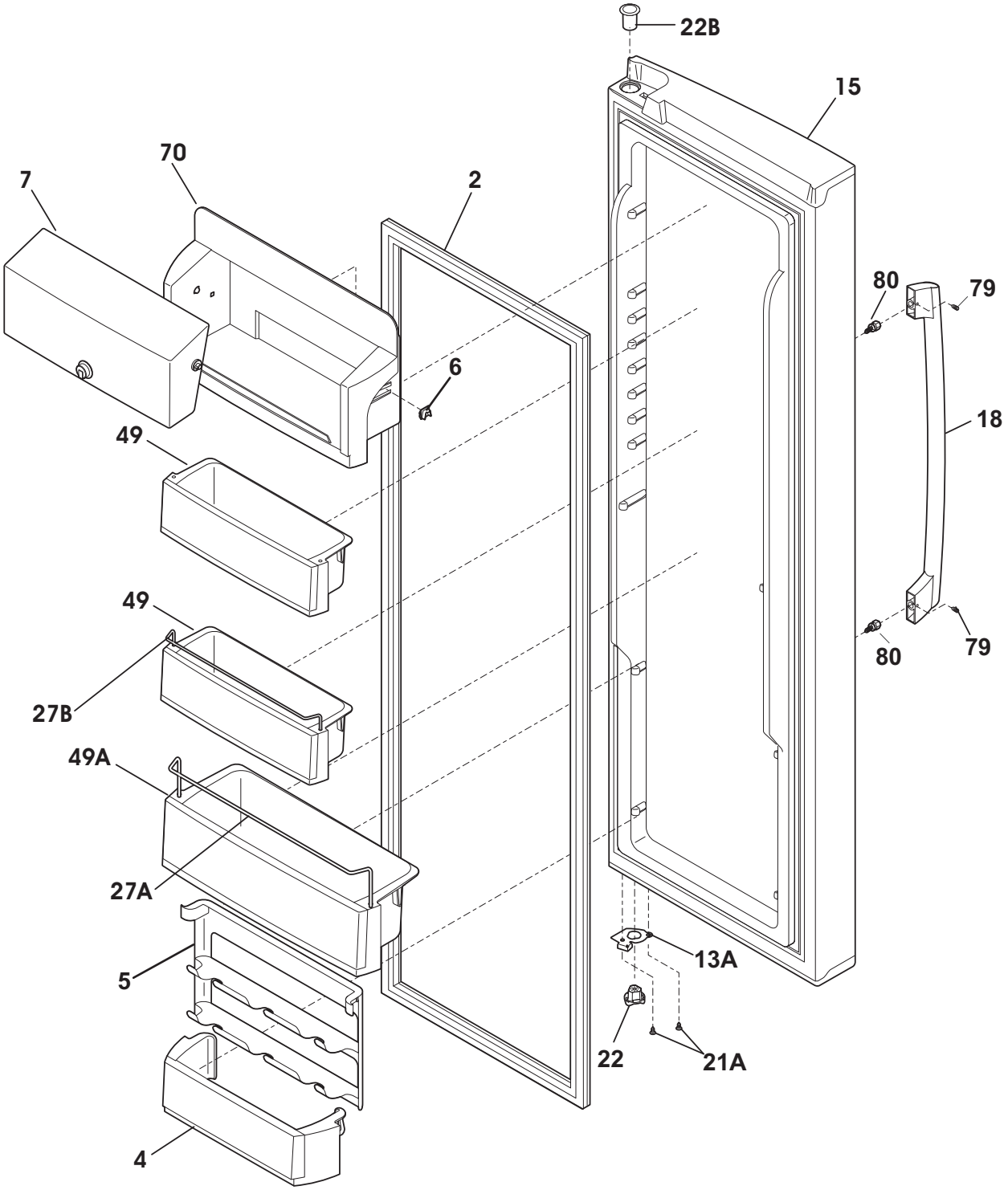

E58RRDCHB0

REFRIGERATOR DOOR

Model Index:
A EI23CS55G (EI23CS55GB0)
B EI23CS55G (EI23CS55GB1)
C EI23CS55G (EI23CS55GS0)
D EI23CS55G (EI23CS55GS1)
E EI23CS55G (EI23CS55GW0)
F EI23CS55G (EI23CS55GW1)

POS. NO	PART NO.							DESCRIPTION
2 #	241510203	A	B	-	-	-	-	Gasket-refr door, black, magnetic
2 #	241510201	-	-	C	D	E	F	Gasket-refr door, white, magnetic
4	241751401	A	B	C	D	E	F	Bin-door, pseudo, bottom
5	241516102	A	B	C	D	E	F	Rack-can
6	241515901	A	B	C	D	E	F	Lug-dairy compartment
7	241749201	A	B	C	D	E	F	Door-dairy
7*	241836301	A	B	C	D	E	F	Knob-dairy door
7*	241836401	A	B	C	D	E	F	Latch-door
7*	241836201	A	B	C	D	E	F	Divider-dairy compt
7*	241641501	A	B	C	D	E	F	Screw
13A	241942601	A	B	C	D	E	F	Door Stop, black
15	241837218	A	B	-	-	-	-	Door-refr, black, complete assy
15	241837219	-	-	C	D	-	-	Door-refr, stainless, complete assy
15	241837217	-	-	-	-	E	F	Door-refr, white, complete assy
18	241761011	A	B	-	-	-	-	Handle-door, (2)
18	241761010	-	-	C	D	-	-	Handle
18	241761012	-	-	-	-	E	F	Handle-door
18*	241601002	A	B	C	D	E	F	Wrench, allen
21A	240442706	A	B	C	D	E	F	Screw-#10-32 X 3/4, zinc
22	241760501	A	B	C	D	E	F	Bearing-hinge, black, lower
22B	241760404	A	B	-	-	-	-	Bearing, hinge, top
22B	241760403	-	-	C	D	E	F	Bearing, hinge, top
27A	241752802	A	B	C	D	E	F	Retainer-bottle
27B	241752803	A	B	C	D	E	F	Retainer-bottle, 2 liter
49	241750501	A	B	C	D	E	F	Bin-door, 2-liter
49A	241750201	A	B	C	D	E	F	Bin-door, gallon
70	241749301	A	B	C	D	E	F	Compartment-dairy, removable
79	218755401	A	B	C	D	E	F	Screw-set, 10-32 x 0.375
80	218755504	A	B	C	D	E	F	Screw-shoulder, #10 AB, handle mounting

Functional Parts
* Non-Illustrated Parts

CABINET

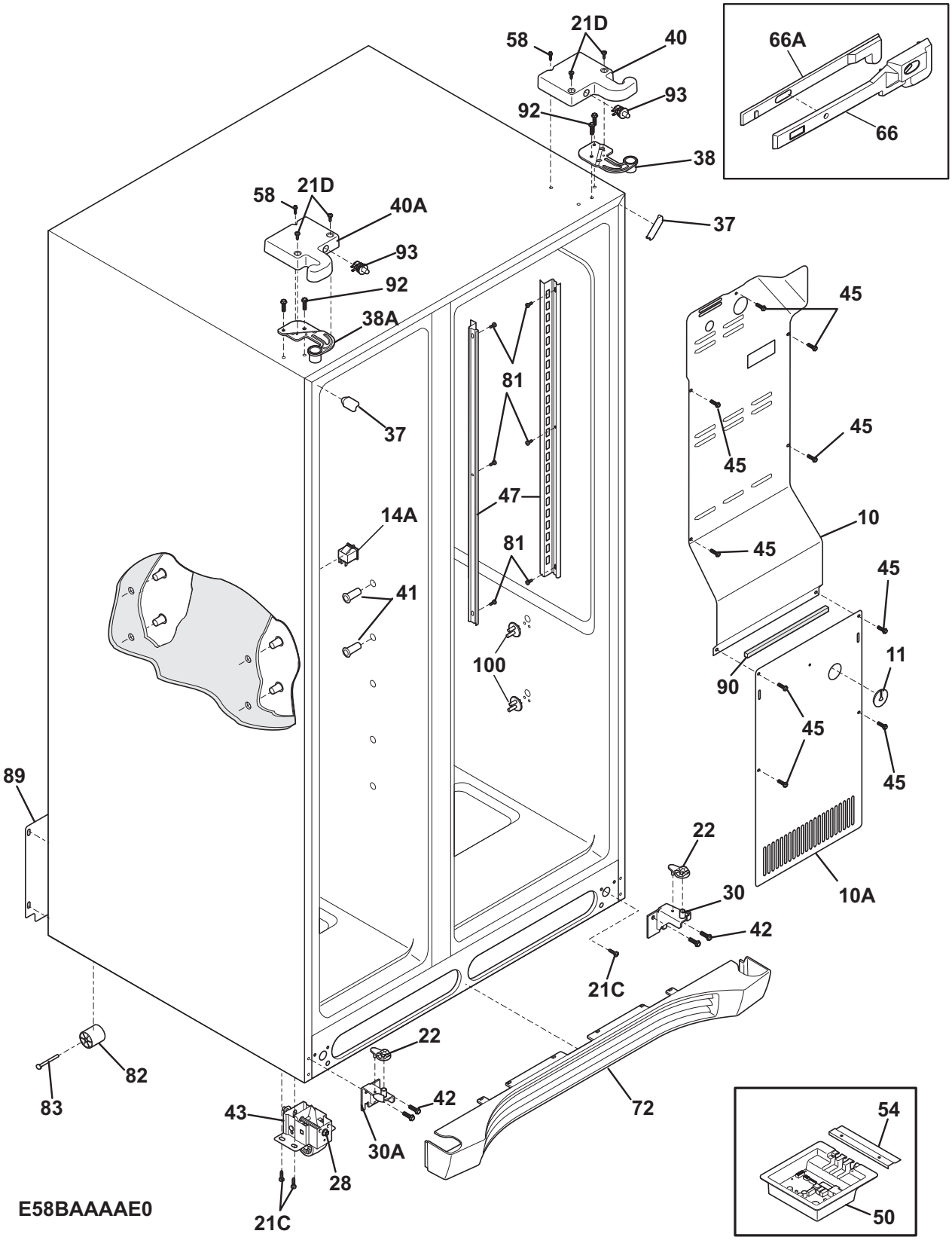
58
21D
40
66A
93
92
66
38
58
21D
40A
37
93
92
38A
45
81
37
45
45
47
14A
10
81
45
45
41
100
11
90
45
45
89
22
30
10A
42
21C
22
82
83
42
72
43
30A
54
28
21C
50
E58BAAAAE0

CABINET

Model Index:
A EI23CS55G (EI23CS55GB0)
B EI23CS55G (EI23CS55GB1)
C EI23CS55G (EI23CS55GS0)
D EI23CS55G (EI23CS55GS1)
E EI23CS55G (EI23CS55GW0)
F EI23CS55G (EI23CS55GW1)

POS. NO	PART NO.							DESCRIPTION
10	241509804	A	B	C	D	E	F	Cover-air duct
10A	240475912	A	-	C	-	E	-	Cover-evap coil, lower
10A	241719712	-	B	-	D	-	F	Cover-evap coil, lower
14A	241547901	A	B	C	D	E	F	Switch-light/lamp, frzr door
11	5303208309	A	B	C	D	E	F	Plug-hole, factory test
21C	218252201	A	B	C	D	E	F	Screw, #8 truss hd, 10-32CA x 0.500
21D	241548003	A	B	C	D	E	F	Screw, 10-32 x 3/8
22	241766601	A	B	C	D	E	F	Plate-door closer
28	240335502	A	B	C	D	E	F	Bolt-roller adj, hex washer head, 1/4-20 x 4.020, (2), special
30	241796101	A	B	C	D	E	F	Bracket-lower hinge, w/hinge pin
30A	241796102	A	B	C	D	E	F	Bracket-lower hinge, frzr, w/hinge pin
37	240337610	A	B	-	-	-	-	Trim-cabinet corner, black, (2)
37	240337612	-	-	C	D	-	-	Trim-cabinet corner, nickeloid, (2)
37	240337608	-	-	-	-	E	F	Trim-cabinet corner, white, (2)
38	241761301	A	B	C	D	E	F	Bracket-upper hinge, RH
38A	241761302	A	B	C	D	E	F	Bracket-upper hinge, LH
40	241761503	A	B	-	-	-	-	Cover-upper hinge, black
40	241761501	-	-	C	D	-	-	Cover-upper hinge, silver metallic
40	241761505	-	-	-	-	E	F	Cover-upper hinge, white
40*	241835801	A	B	C	D	E	F	Harness-wiring
40A	241761504	A	B	-	-	-	-	Cover-upper hinge, black
40A	241761502	-	-	C	D	-	-	Cover-upper hinge, silver metallic
40A	241761506	-	-	-	-	E	F	Cover-upper hinge, white
40A*	241891901	A	B	C	D	E	F	Harness-wiring, freezer
41	241550801	A	B	C	D	E	F	Grommet-shelf mtg, 1.40" long
41*	241550701	A	B	C	D	E	F	Grommet-shelf mtg, .96" long
42	240578902	A	B	C	D	E	F	Screw, hex head, 1/4-20 x 5/8
43	240335005	A	B	C	D	E	F	Roller Assy, adjustable, front, (2)
45	241500303	A	B	C	D	E	F	Screw, hex washer head, 8-18AB x 1/2
47	241513001	A	B	C	D	E	F	Channel-shelf mtg, side, (2)
50	241757002	A	B	C	D	E	F	Board-main power
54	241532401	A	B	C	D	E	F	Channel
58	218781101	A	B	C	D	E	F	Screw, pan head, 8-18 x 0.625
66	241861301	A	B	C	D	E	F	Housing-damper
66*	240346703	A	B	C	D	E	F	Tape-foam
66*	241781601	A	B	C	D	E	F	Seal-return air
66A	241861201	A	B	C	D	E	F	Slide-damper, meat pan
72	241758702	A	B	-	-	-	-	Grille/Kickplate, black
72	241758701	-	-	C	D	-	-	Grille/Kickplate, grey
72	241758703	-	-	-	-	E	F	Grille/Kickplate, white
81	5304455650	A	B	C	D	E	F	Screw, hex washer head, 8-15A x 0.625, Low Profile
82	5304418225	A	B	C	D	E	F	Roller, compressor base, rear, (2)
83	5304455655	A	B	C	D	E	F	Rivet, flat head, 1/4 OD x 1-3/4, roller pin
89	241733905	A	B	C	D	E	F	Cover-access, w/label
90	218249808	A	B	C	D	E	F	Seal-coil cover

CABINET

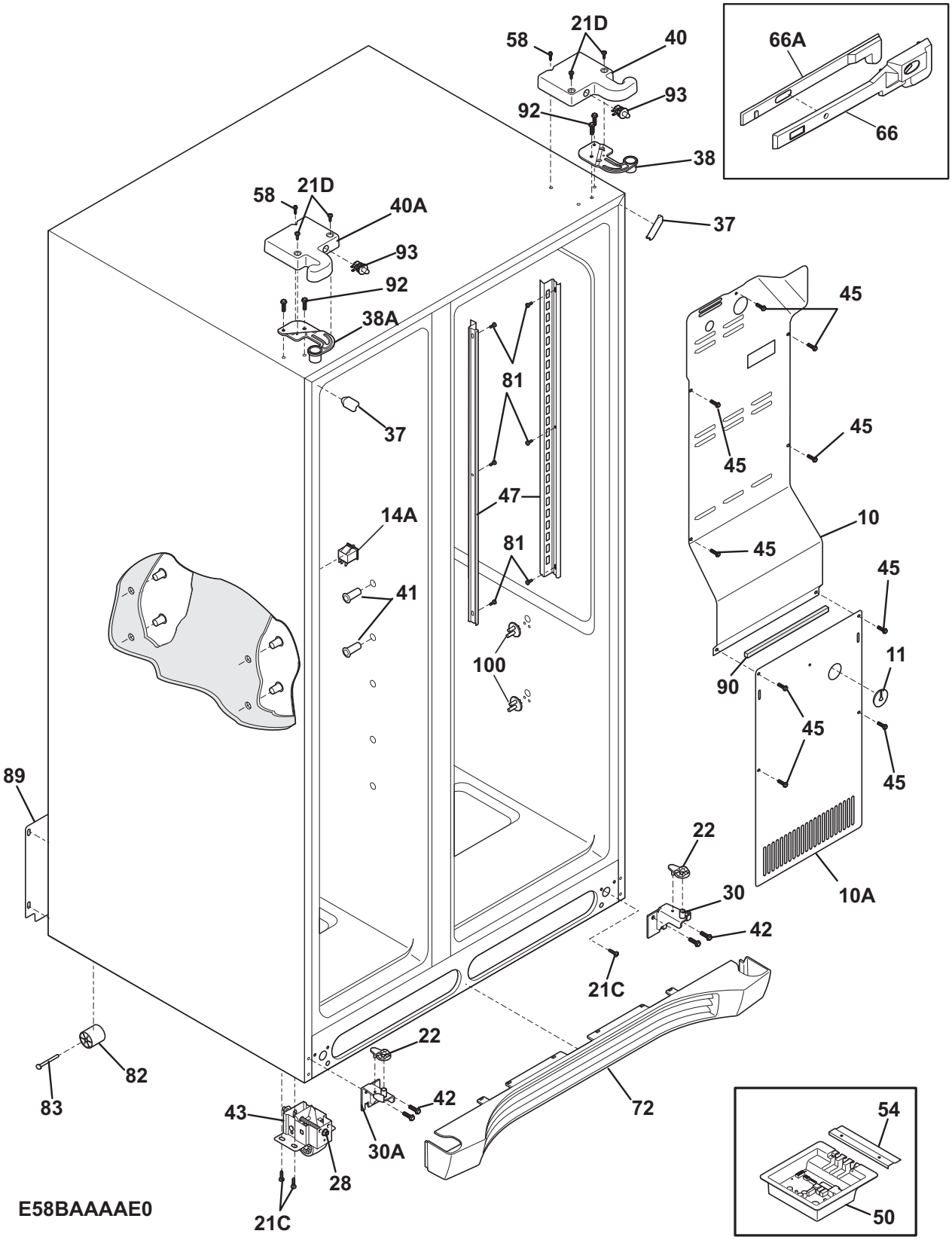
58
21D
40
66A
93
92
66
38
58
21D
40A
37
93
92
38A
45
81
37
45
45
47
14A
10
81
45
45
41
100
11
90
45
89
45
22
30
10A
42
21C
22
82
83
42
72
43
30A
54
28
21C
50
E58BAAAAE0

CABINET

Model Index:
A EI23CS55G (EI23CS55GB0)
B EI23CS55G (EI23CS55GB1)
C EI23CS55G (EI23CS55GS0)
D EI23CS55G (EI23CS55GS1)
E EI23CS55G (EI23CS55GW0)
F EI23CS55G (EI23CS55GW1)

POS. NO	PART NO.							DESCRIPTION
92	241710601	A	B	C	D	E	F	Screw, hex washer hd, 1/4 x 7/8, hinge mtg
93 #	241911702	A	B	-	-	-	-	Switch, plunger style
93 #	241911701	-	-	C	D	E	F	Switch, plunger style
100	240350802	A	B	C	D	E	F	Support, crisper cover, rear, (4)
100*	240423701	A	B	C	D	E	F	Support, crisper cover, front, (4)
*	241852501	A	B	C	D	E	F	Clip, wiring harness
*	241890601	A	B	C	D	E	F	Louver, air supply, crisper
*	5303321321	A	B	-	-	-	-	Paint, touch-up, black
*	5303321319	-	-	-	-	E	F	Paint, touch-up, white

Functional Parts
* Non-Illustrated Parts

SHELVES

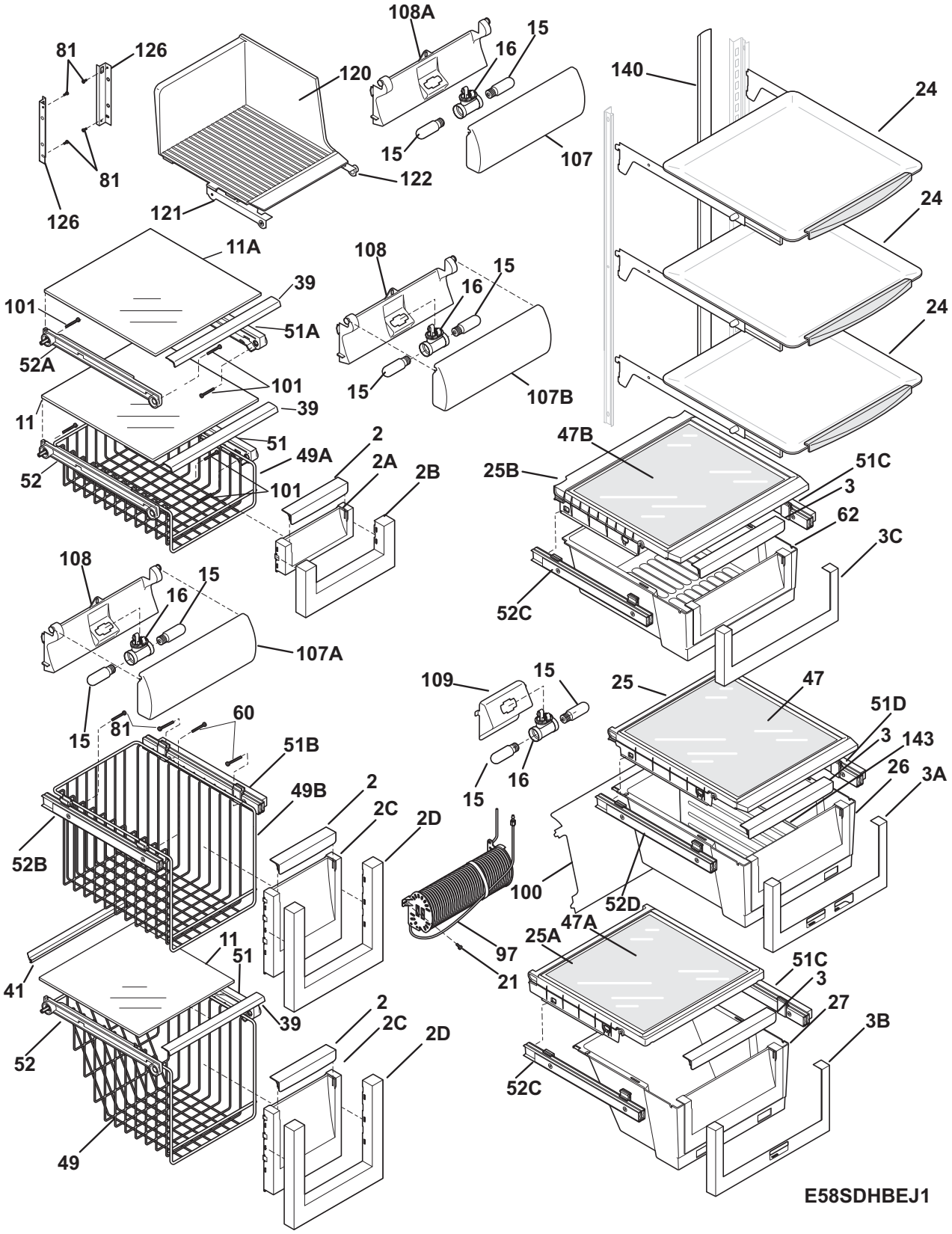
108A
15
16
81
126
120
140
24
15
107
122
81
126
121
24
11A
108
15
39
16
101
51A
24
52A
101
15
107B
39
11
51
2
47B
49A
2A
25B
51C
52
101
2B
3
62
3C
108
15
16
52C
107A
109
15
25
47
15
81
60
51D
3
143
51B
15
16
26
3A
49B
2
2C
2D
52B
100
52D
47A
11
25A
97
51
51C
41
21
3
27
39
2
2C
2D
3B
52
52C
49
E58SDHBEJ1

SHELVES

Model Index: A EI23CS55G (EI23CS55GB0)
B EI23CS55G (EI23CS55GB1)
C EI23CS55G (EI23CS55GS0)
D EI23CS55G (EI23CS55GS1)
E EI23CS55G (EI23CS55GW0)
F EI23CS55G (EI23CS55GW1)

POS. NO	PART NO.							DESCRIPTION
2	241741301	A	B	C	D	E	F	Trim-basket
2A	241741601	A	B	C	D	E	F	Trim-basket, front
2B	241742101	A	B	C	D	E	F	Front-frzr basket
2C	241743201	A	B	C	D	E	F	Trim-basket
2D	241743901	A	B	C	D	E	F	Trim-basket
3	241745301	A	B	C	D	E	F	Handle-crisper pan, silver
3A	5303918369	A	B	C	D	E	F	Trim-crisper, w/hum cntl&btn
3B	5303918370	A	B	C	D	E	F	Trim-crisper, w/hum cntl&btn
3C	241748601	A	B	C	D	E	F	Trim-meat pan
11	240443357	A	B	C	D	E	F	Shelf-freezer, glass, lower
11A	240443358	A	B	C	D	E	F	Shelf-freezer, glass, upper
15	241552801	A	B	C	D	E	F	Light Bulb
16	241622802	A	B	C	D	E	F	Socket-light, frz light
16*	241510802	A	B	C	D	E	F	Harness-wiring, frz light
16*	241797601	A	B	C	D	E	F	Harness-wiring
21	5304455658	A	B	C	D	E	F	Screw, hx wshr hd sems, 8-15A x 0.625
24	241753101	A	B	C	D	E	F	Shelf-glass, formed
25	241745501	A	B	C	D	E	F	Cover-crisper pan, upper
25A	241747101	A	B	C	D	E	F	Cover-crisper pan, lower
25B	241861501	A	B	C	D	E	F	Cover-meat pan, cantilever
26	241745601	A	B	C	D	E	F	Pan-crisper, upper, w/divi retainer
26*	240349801	A	B	C	D	E	F	Clip-slide, pan-crisper
27	241747301	A	B	C	D	E	F	Pan-crisper, lower
39	240367603	A	B	C	D	E	F	Trim-shelf, 11.65", front
41	241571201	A	B	C	D	E	F	Trim-shelf, rear
47	240350649	A	B	C	D	E	F	Insert-pan cover, glass
47A	240350603	A	B	C	D	E	F	Insert-pan cover, glass
47B	240443380	A	B	C	D	E	F	Insert-pan cover, glass, meat pan
49	241744201	A	B	C	D	E	F	Basket-sliding
49A	241742201	A	B	C	D	E	F	Basket-sliding, upper, half
49B	241744001	A	B	C	D	E	F	Basket-sliding, upper, full
51	241799801	A	B	C	D	E	F	Hanger-shelf glass, RH
51A	241514701	A	B	C	D	E	F	Hanger-shelf glass, RH
51B	241809101	A	B	C	D	E	F	Hanger-basket, RH
51B*	297049500	A	B	C	D	E	F	Clip-slide, basket
51C	240579807	A	B	C	D	E	F	Hanger-basket, 13.00, RH
51D	240579808	A	B	C	D	E	F	Hanger-basket, 10.19, RH
52	241799901	A	B	C	D	E	F	Hanger-shelf glass, LH
52A	241514801	A	B	C	D	E	F	Hanger-shelf glass, LH
52B	241809102	A	B	C	D	E	F	Hanger-basket, LH
52C	240579805	A	B	C	D	E	F	Hanger-basket, 13.00, LH
52C*	241563901	A	B	C	D	E	F	Clip-slide, pan-crisper, rear
52C*	241564001	A	B	C	D	E	F	Clip-slide, pan-crisper, front
52D	240579806	A	B	C	D	E	F	Hanger-basket, 10.19, LH
60	218362501	A	B	C	D	E	F	Screw, hex washer head, 8-18AB x 1.250, spacer, (2)

SHELVES

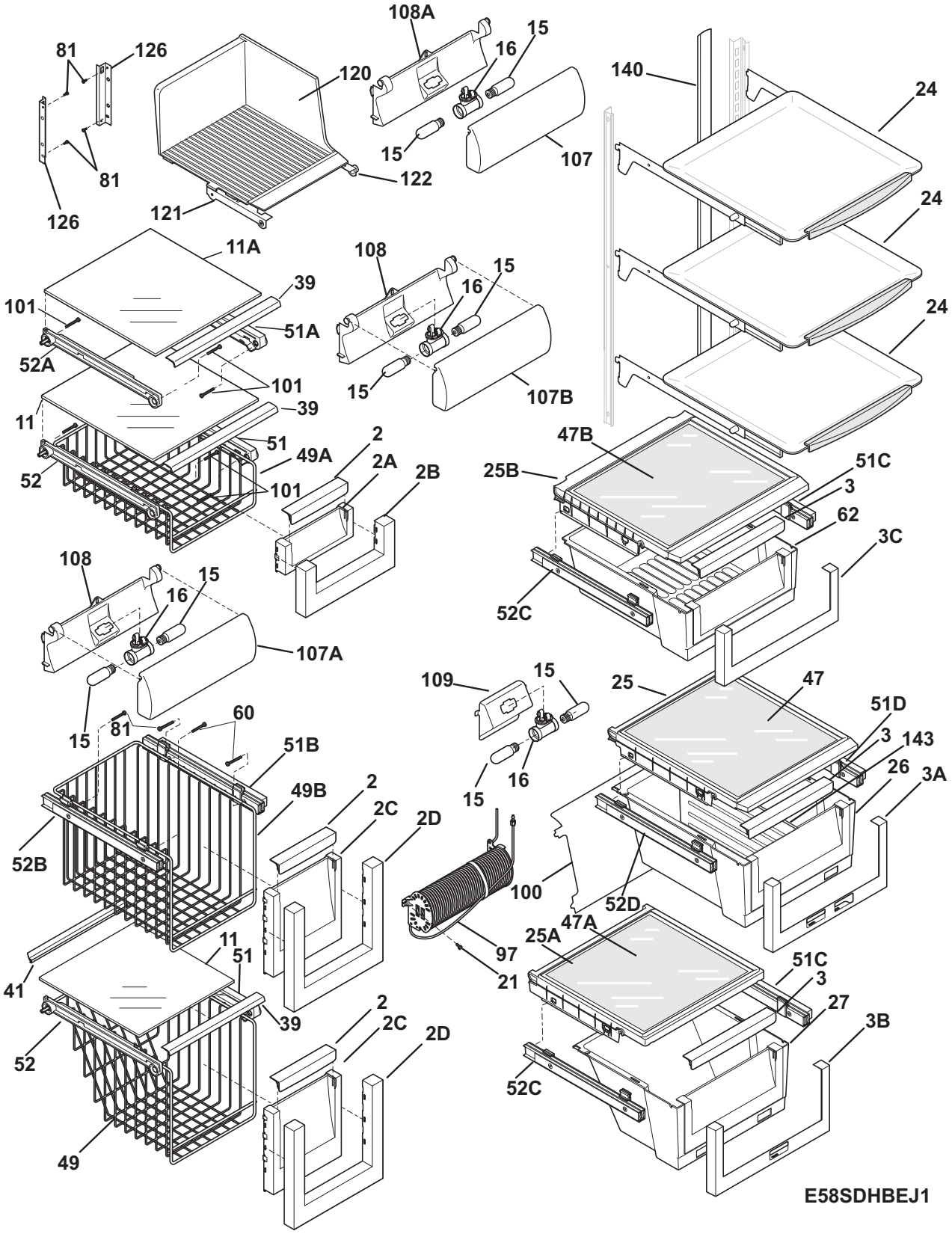
108A
15
16
81
126
120
140
24
15
107
122
81
126
121
24
11A
108
15
39
16
101
51A
24
52A
101
15
107B
39
11
51
2
47B
49A
2A
25B
51C
52
101
2B
3
62
3C
108
15
16
52C
107A
109
15
25
47
15
81
60
51D
3
143
51B
15
16
26
3A
49B
2
2C
2D
52B
100
52D
47A
11
25A
97
51
51C
41
21
3
27
39
2
2C
2D
3B
52
52C
49
E58SDHBEJ1

SHELVES

Model Index:
A EI23CS55G (EI23CS55GB0)
B EI23CS55G (EI23CS55GB1)
C EI23CS55G (EI23CS55GS0)
D EI23CS55G (EI23CS55GS1)
E EI23CS55G (EI23CS55GW0)
F EI23CS55G (EI23CS55GW1)

POS. NO	PART NO.							DESCRIPTION
62	241783501	A	B	C	D	E	F	Pan-meat
81	5304455650	A	B	C	D	E	F	Screw, hex washer head, 8-15A x 0.625, Low Profile
97	241532006	A	B	C	D	E	F	Water Tank
100	240326304	A	B	C	D	E	F	Cover-water tank
101	218493101	A	B	C	D	E	F	Screw, hex washer head, 8-18AB x 1-3/4
107	241753601	A	B	C	D	E	F	Shield-light, upper
107A	241521802	A	B	C	D	E	F	Shield-light, frzr
107B	241513402	A	B	C	D	E	F	Shield-light, meat pan
108	241513301	A	B	C	D	E	F	Cover-wiring, meat pan light
108A	241753701	A	B	C	D	E	F	Housing-light, upper, fresh food
109	241513202	A	B	C	D	E	F	Base-crisper light socket
120	241740901	A	B	C	D	E	F	Shelf-ice cream
121	241504701	A	B	C	D	E	F	Rail-ice cream shelf, LH
122	241504702	A	B	C	D	E	F	Rail-ice cream shelf, RH
126	241674401	A	B	C	D	E	F	Channel, auger mtg, LH
126	241674402	A	B	C	D	E	F	Channel, auger mtg, RH
140	241812501	A	B	C	D	E	F	Channel, wtr tube cover
143	241746001	A	B	C	D	E	F	Divider-crisper pan
*	241768192	A	B	C	D	E	F	Energy Guide

CONTROLS

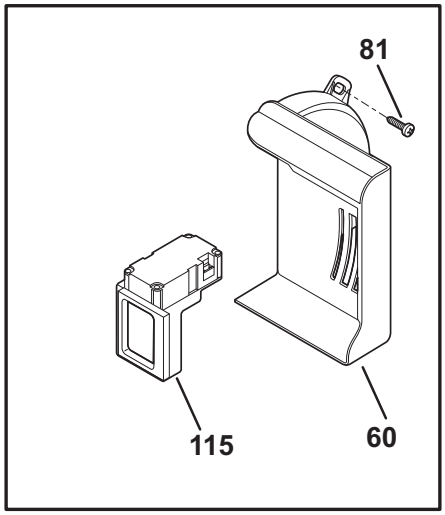

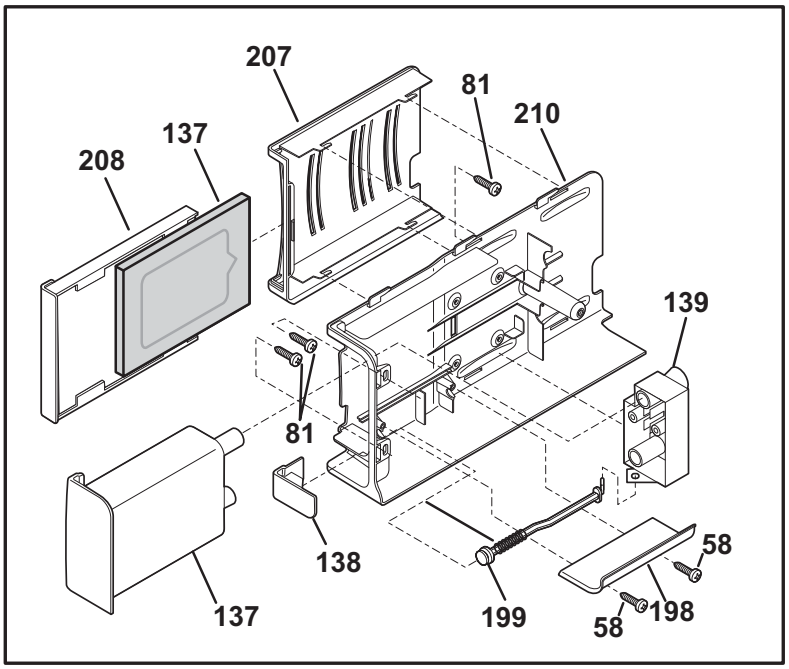

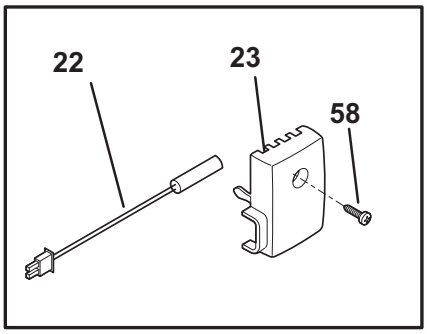

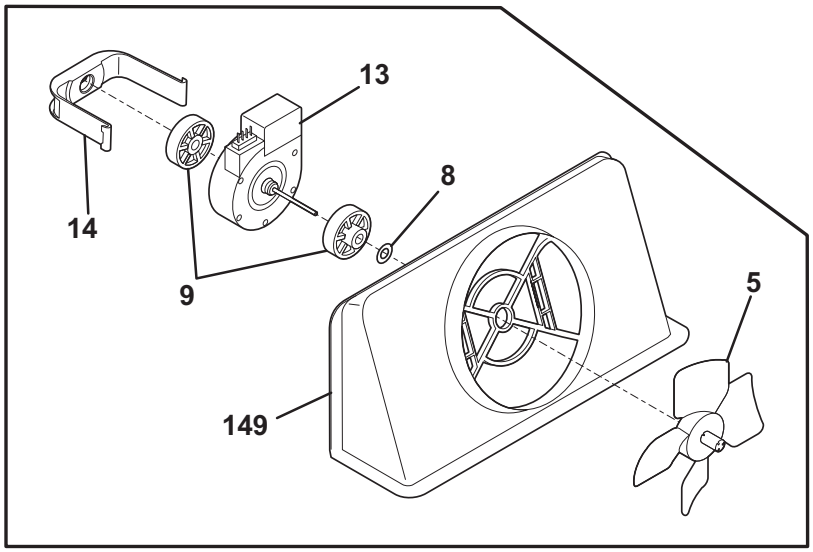

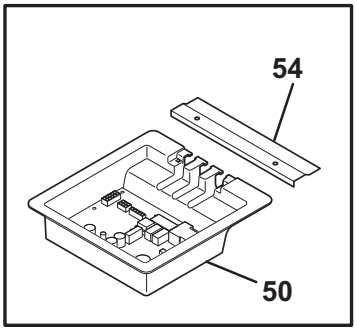

E58TDBAAD0

CONTROLS

Model Index:
A EI23CS55G (EI23CS55GB0)
B EI23CS55G (EI23CS55GB1)
C EI23CS55G (EI23CS55GS0)
D EI23CS55G (EI23CS55GS1)
E EI23CS55G (EI23CS55GW0)
F EI23CS55G (EI23CS55GW1)

POS. NO	PART NO.							DESCRIPTION
5 #	5308000010	A	B	C	D	E	F	Fan Blade, red, evaporator fan
8	215474201	A	B	C	D	E	F	Washer, "slinger", nylon, evap fan shaft
9	241518301	A	B	C	D	E	F	Bushing, motor mounting
13	241509402	A	B	C	D	E	F	Motor, evaporator fan
14	241517701	A	B	C	D	E	F	Clip, evap fan motor
22	240597203	A	B	C	D	E	F	Sensor, (2)
23	241845401	A	B	C	D	E	F	Housing-sensor
50	241757002	A	B	C	D	E	F	Board-main power
54	241532401	A	B	C	D	E	F	Channel
58	5304455649	A	B	C	D	E	F	Screw, pan hd, 6-20 x 0.438
60	241755401	A	B	C	D	E	F	Diffuser-air
60*	241755501	A	B	C	D	E	F	Insulation-air duct
81	5304455658	A	B	C	D	E	F	Screw, hx wshr hd sems, 8-15A x 0.625
115	241853801	A	B	C	D	E	F	Damper Assy, w/seal
137	5304464678	A	B	C	D	E	F	Filters-air & water, 1 water, 1 air, carbon cassette, front, w/o'rings wtr
137*	241944301	A	B	C	D	E	F	Bypass, water filter, Optional Part
138	241754602	A	B	C	D	E	F	Button-filter release
139	240396002	A	B	C	D	E	F	Base-water filter
149	241517601	A	B	C	D	E	F	Shroud-evap fan mtg
149*	241528304	A	B	C	D	E	F	Seal, foam, evap fan assy
198	241754801	A	B	C	D	E	F	Support, water filter
199	240397501	A	B	C	D	E	F	Rod
199*	240398401	A	B	C	D	E	F	Spring-filter release rod
207	241754201	A	B	C	D	E	F	Housing-air filter
208	241754301	A	B	C	D	E	F	Sleeve, air filter, front
210	241755201	A	B	C	D	E	F	Housing-water filtr
*	241852501	A	B	C	D	E	F	Clip, wiring harness

SYSTEM

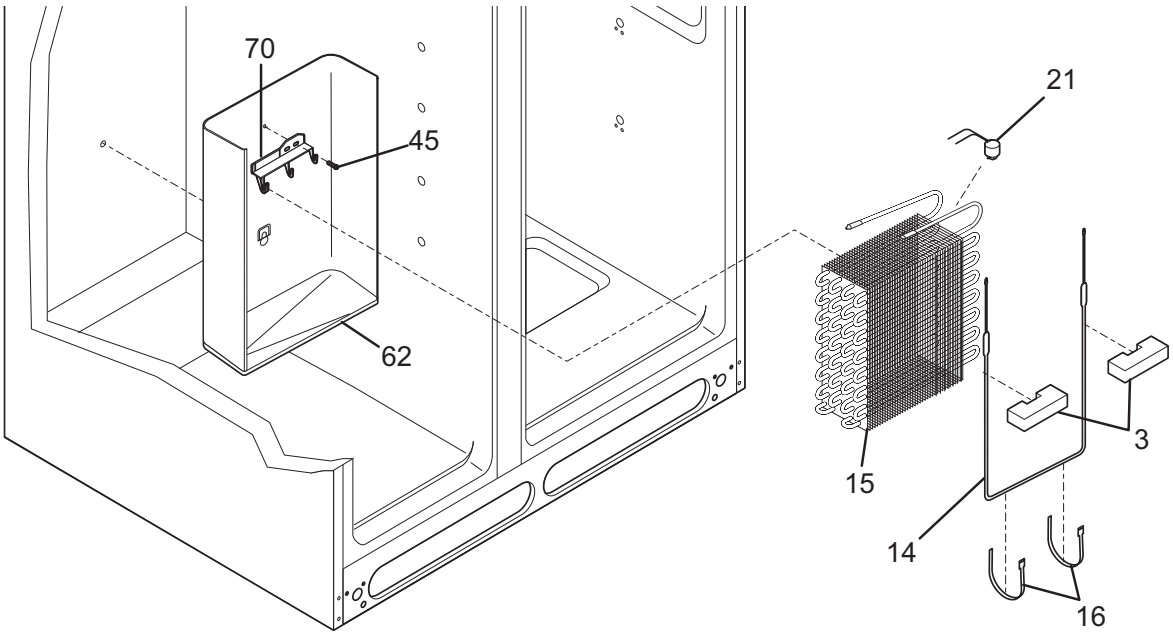
70
45
62
21
3
15
14
16

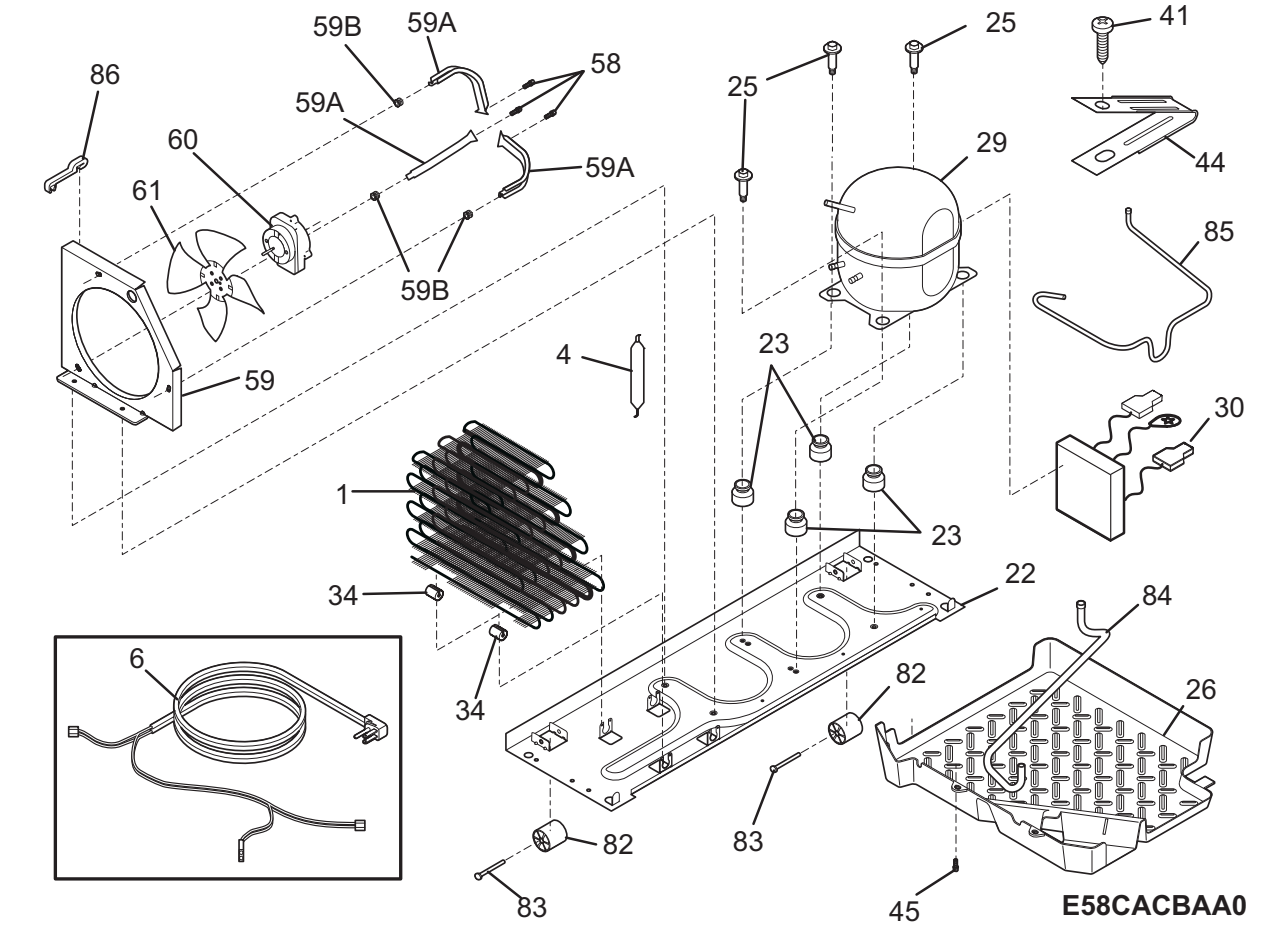
59B
59A
58
86
59A
60
59A
61
59B
59
4
1
34
34
6
25
25
29
41
44
85
23
23
30
22
84
82
26
82
83
83
45
E58CACBAA0

SYSTEM

Model Index:
A EI23CS55G (EI23CS55GB0)
B EI23CS55G (EI23CS55GB1)
C EI23CS55G (EI23CS55GS0)
D EI23CS55G (EI23CS55GS1)
E EI23CS55G (EI23CS55GW0)
F EI23CS55G (EI23CS55GW1)

POS. NO	PART NO.							DESCRIPTION
1	240333605	A	B	C	D	E	F	Condenser
3	218679607	A	B	C	D	E	F	Block-evap coil, styrofoam, (2)
4 #	218944001	A	B	C	D	E	F	Drier-filter, R134a System
6	241516901	A	B	C	D	E	F	Cord-service
6 #	241834902	A	B	C	D	E	F	Harness-wiring, machine compt
6*	241520403	A	B	C	D	E	F	Harness-wiring
14 #	240316107	A	B	C	D	E	F	Heater-defrost
15 #	5303918284	A	B	C	D	E	F	Evaporator Kit
16	5308000110	A	B	C	D	E	F	Strap-evap/heater, aluminum, (2)
21	5303918214	A	B	C	D	E	F	Thermostat-defrost, kit
22	240330011	A	B	C	D	E	F	Base-compressor mtg
22*	218252201	A	B	C	D	E	F	Screw, #8 truss hd, 10-32CA x 0.500
23	218513300	A	B	C	D	E	F	Grommet-compr mtg, (4)
25	240491503	A	B	C	D	E	F	Screw-compressor mtg, 1/4-28 x 1.16, (4)
26	241697501	A	B	C	D	E	F	Pan-defrost drain
29 #	241547601	A	B	C	D	E	F	Compressor, w/electricals
30	241577501	A	B	C	D	E	F	Invertor
34	240405201	A	B	C	D	E	F	Grommet, rubber, black, cond tube/wire
41	240555002	A	B	C	D	E	F	Screw-#8-32 X 3/8
44	215174700	A	B	C	D	E	F	Clamp-service cord, strain relief, galv steel
45	5304455650	A	B	C	D	E	F	Screw, hex washer head, 8-15A x 0.625, Low Profile
58	240433203	A	B	C	D	E	F	Screw, hex washer head, 8-18 x 3/8
59	240315502	A	B	C	D	E	F	Shroud-cond fan
59*	240346701	A	B	C	D	E	F	Tape-foam seal, shroud
59*	240359403	A	B	C	D	E	F	Screw-fan shroud, (2)
59A	240346501	A	B	C	D	E	F	Bracket-support, cond mtr, (3)
59B	240346601	A	B	C	D	E	F	Grommet-bracket, (3)
60	241584301	A	B	C	D	E	F	Motor-condenser fan
61	241639501	A	B	C	D	E	F	Blade-condenser fan
62	240429402	A	B	C	D	E	F	Trough-drain
70	218990801	A	B	C	D	E	F	Bracket-evap/cvr mtg
82	5304418225	A	B	C	D	E	F	Roller, compressor base, rear, (2)
83	5304455655	A	B	C	D	E	F	Rivet, flat head, 1/4 OD x 1-3/4, roller pin
84	5304421068	A	B	C	D	E	F	Tube-drain, lower
85	241719501	A	B	C	D	E	F	Tube-connector, suction
86	240409302	A	B	C	D	E	F	Spacer-cond tube, black
*	241852501	A	B	C	D	E	F	Clip, wiring harness
*	5303918222	A	B	C	D	E	F	Hot Tube Repair Kit, service
* #	5303918327	A	B	C	D	E	F	Heat Exchanger Kit, suction line

Functional Parts
* Non-Illustrated Parts

ICE & WATER DISPENSER

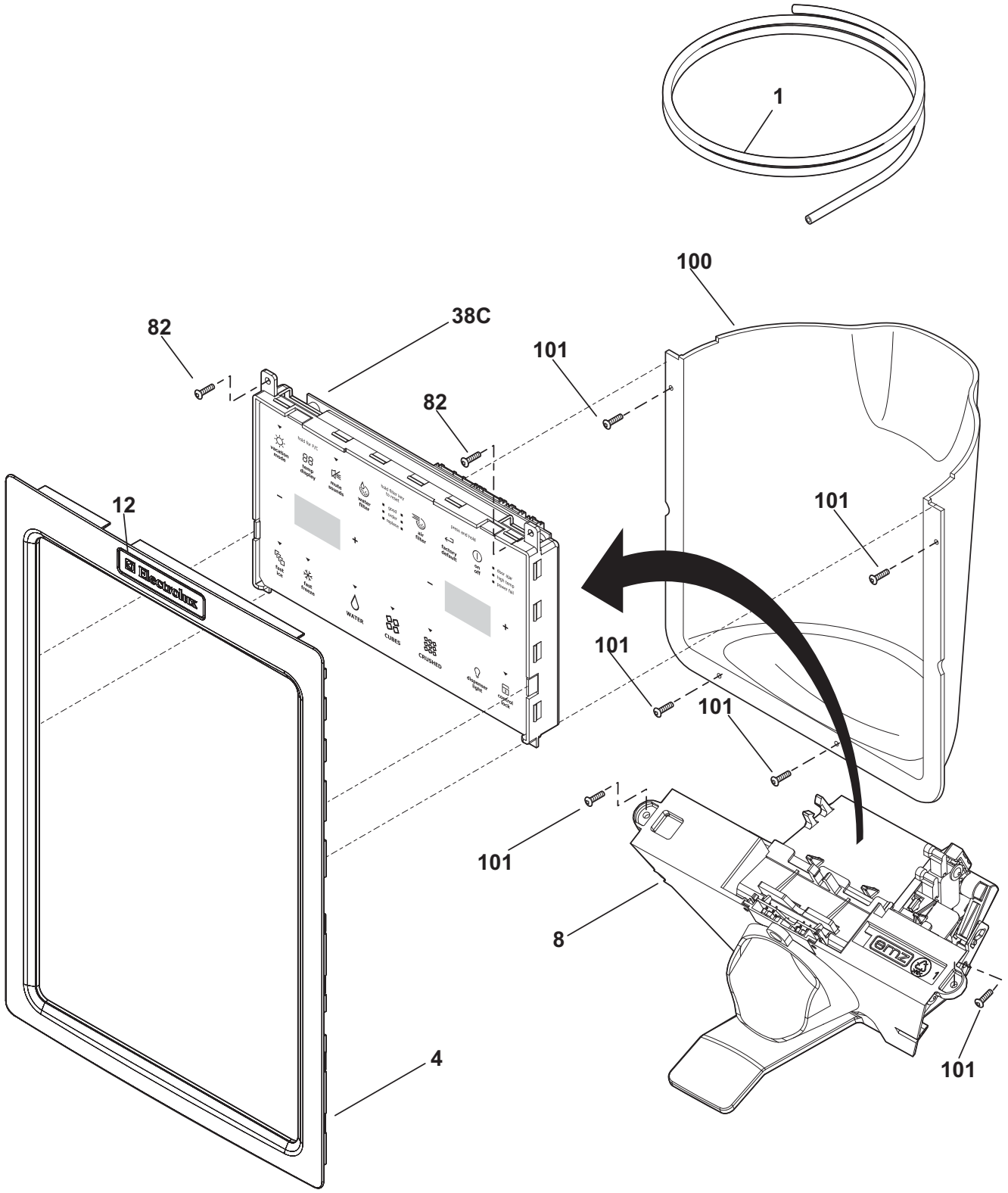

ICE & WATER DISPENSER

Model Index:
A EI23CS55G (EI23CS55GB0)
B EI23CS55G (EI23CS55GB1)
C EI23CS55G (EI23CS55GS0)
D EI23CS55G (EI23CS55GS1)
E EI23CS55G (EI23CS55GW0)
F EI23CS55G (EI23CS55GW1)

POS. NO	PART NO.							DESCRIPTION
1	218976409	A	B	C	D	E	F	Tube, water, 60", natural, door
1*	218976420	A	B	C	D	E	F	Tube-water inlet, inlet valve, to filter
1*	218976421	A	B	C	D	E	F	Tube-water inlet, valve to door
1*	218976915	A	B	C	D	E	F	Tube-water inlet, inlet valve, to I/M inlet
1*	240561702	A	B	C	D	E	F	Seal-water inlet, inlet valve, to ice maker
4	241757502	A	B	-	-	-	-	Cover-module, black
4	241757501	-	-	C	D	-	-	Cover-module, stainless-look
4	241757503	-	-	-	-	E	F	Cover-module, white
8	241753402	A	B	-	-	E	F	Module-dispenser, clear
8	241753401	-	-	C	D	-	-	Module-dispenser, silver
12	241873302	A	B	-	-	-	-	Nameplate, black
12	241873301	-	-	C	D	-	-	Nameplate, Electrolux, stainless
12	241873303	-	-	-	-	E	F	Nameplate, white
38C#	5303918585	A	B	C	D	-	-	User Interface Kit, VCC Compressor
38C#	5303918587	-	-	-	-	E	F	User Interface Kit, VCC Compressor
38C*	241853101	A	B	C	D	E	F	Harness-ribbon cable
82	240363403	A	B	C	D	E	F	Screw, 8-18 x 0.500, 2
100	241753302	A	B	-	-	-	-	Liner-ice dispenser, black
100	241753301	-	-	C	D	-	-	Liner-sump, light gray
100	241753303	-	-	-	-	E	F	Liner-sump, white
101	240363402	A	B	C	D	E	F	Screw, plask, #8-18 x .500
*	5303918371	A	B	C	D	E	F	Dispenser heater kit, 115

ICE CONTAINER

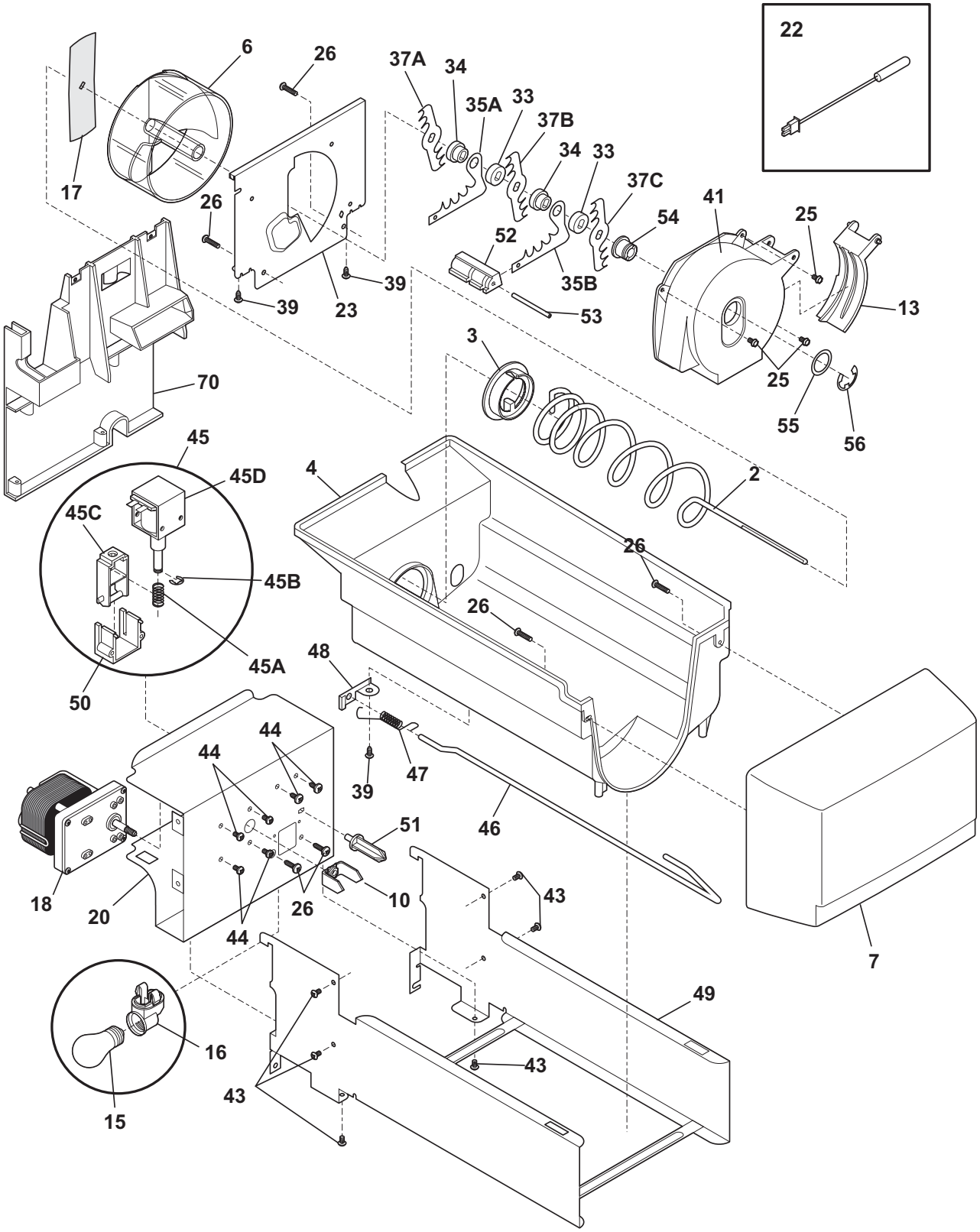

E58YEAAAC0

ICE CONTAINER

Model Index: A EI23CS55G (EI23CS55GB0)
B EI23CS55G (EI23CS55GB1)
C EI23CS55G (EI23CS55GS0)
D EI23CS55G (EI23CS55GS1)
E EI23CS55G (EI23CS55GW0)
F EI23CS55G (EI23CS55GW1)

POS. NO	PART NO.							DESCRIPTION
2	241684701	A	B	C	D	E	F	Auger-ice
3	241685201	A	B	C	D	E	F	Cam-drive
4	241515202	A	B	C	D	E	F	Container-ice, bucket only
6	241685101	A	B	C	D	E	F	Drum-ice disp
7	241740401	A	B	C	D	E	F	Front-ice container
10	241726501	A	B	C	D	E	F	Bar-drive
13	241685301	A	B	C	D	E	F	Gate
15	241555401	A	B	C	D	E	F	Light Bulb
16	241559801	A	B	C	D	E	F	Socket-light
17	241684501	A	B	C	D	E	F	Drive Blade
18 #	241676201	A	B	C	D	E	F	Motor-auger
18*	241522901	A	B	C	D	E	F	Harness-wiring, icmkr/container
20	241675502	A	B	C	D	E	F	Cover-motor
22	240597203	A	B	C	D	E	F	Sensor, (2)
22*	241519401	A	B	C	D	E	F	Clip, sensor
23	241684001	A	B	C	D	E	F	Plate-front
25	241690701	A	B	C	D	E	F	Screw, hex washer head, 8-32T x 0.375
26	215503203	A	B	C	D	E	F	Screw, cr pan hd, 10-16 x 0.500
33	241684801	A	B	C	D	E	F	Spacer
34	241689801	A	B	C	D	E	F	Spacer
35A	241684301	A	B	C	D	E	F	Fixed Blade, round
35B	241684201	A	B	C	D	E	F	Fixed Blade, square
37A	241684101	A	B	C	D	E	F	Blade, crusher #1
37B	241684102	A	B	C	D	E	F	Blade, crusher #2
37C	241684103	A	B	C	D	E	F	Blade, crusher #3
39	241690501	A	B	C	D	E	F	Screw
41	241685601	A	B	C	D	E	F	Housing-crusher
43	215005101	A	B	C	D	E	F	Screw, hanger/rlr mtg, 8-10 x 7/16
44	241842101	A	B	C	D	E	F	Screw, 8-32 x 1/4
45 #	241675701	A	B	C	D	E	F	Solenoid Assy, 115V
45A	241675901	A	B	C	D	E	F	Spring-solenoid
45B	241676001	A	B	C	D	E	F	E-Ring-solenoid
45C	241676101	A	B	C	D	E	F	Actuator-solenoid
45D#	241675801	A	B	C	D	E	F	Solenoid, 115V
46	241684402	A	B	C	D	E	F	Control Rod
47	241731801	A	B	C	D	E	F	Spring-control rod
48	241684602	A	B	C	D	E	F	Bracket-control rod
49	241676501	A	B	C	D	E	F	Rail Assy
50	241675601	A	B	C	D	E	F	Guide-solenoid
51	241676301	A	B	C	D	E	F	Rotation Stop
52	241684901	A	B	C	D	E	F	Spacer-fixed blades
53	241690402	A	B	C	D	E	F	Pin-spiral, fixed blades
54	241685001	A	B	C	D	E	F	Nut-auger
55	241690306	A	B	C	D	E	F	Washer
56	241690201	A	B	C	D	E	F	E-ring
70	241504601	A	B	C	D	E	F	Plate-mounting
70*	241716801	A	B	C	D	E	F	Clip
70*	241551602	A	B	C	D	E	F	Screw, hex head, 8-18B x 0.875
*	241914701	A	B	C	D	E	F	Ice Container Assy
*	218817300	A	B	C	D	E	F	Shield-light

Functional Parts
* Non-Illustrated Parts

ICE MAKER

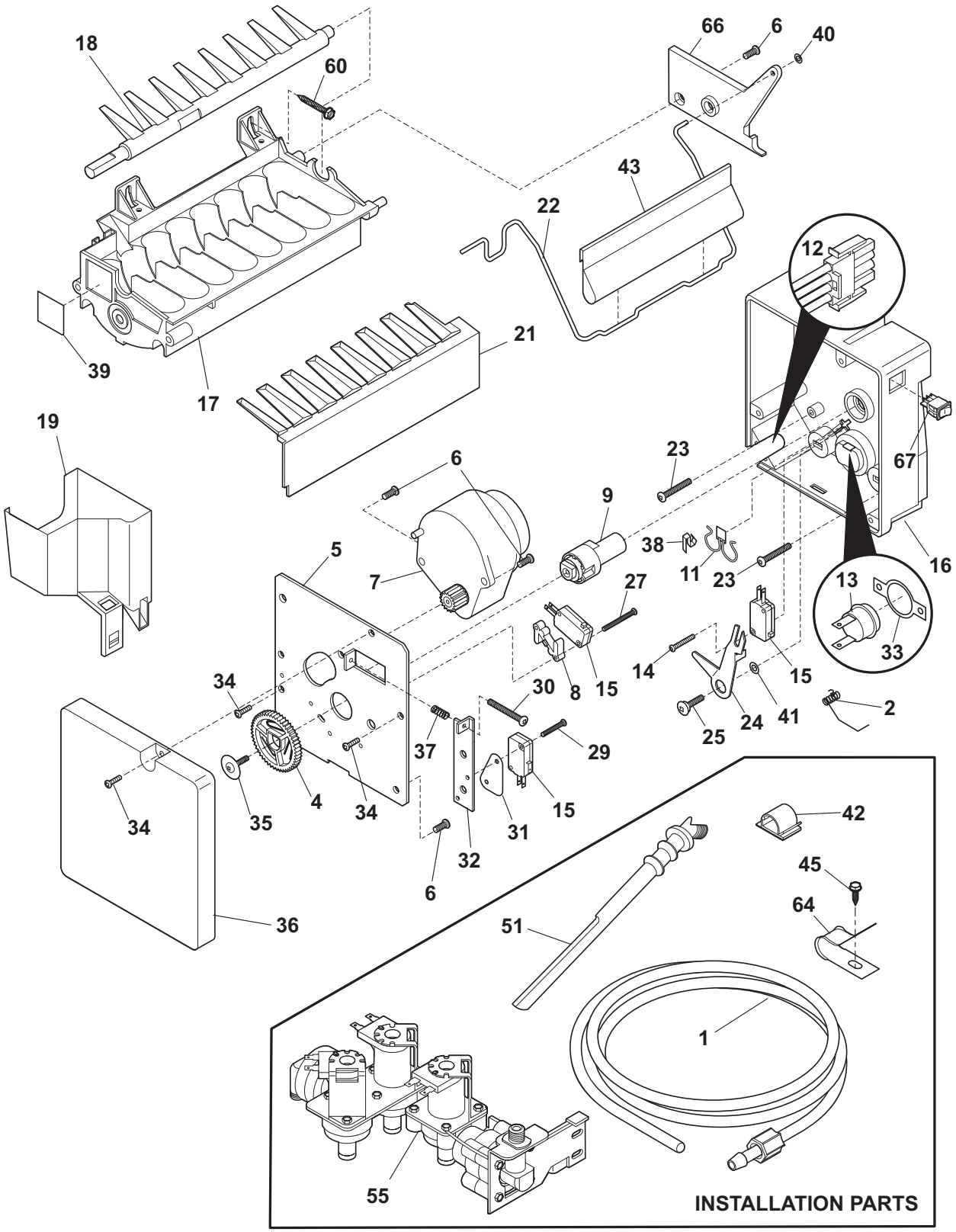

E58I115T

ICE MAKER

Model Index:
A EI23CS55G (EI23CS55GB0)
B EI23CS55G (EI23CS55GB1)
C EI23CS55G (EI23CS55GS0)
D EI23CS55G (EI23CS55GS1)
E EI23CS55G (EI23CS55GW0)
F EI23CS55G (EI23CS55GW1)

POS. NO	PART NO.							DESCRIPTION
1	218976409	A	B	C	D	E	F	Tube, water, 60", natural, door
1*	218976420	A	B	C	D	E	F	Tube-water inlet, inlet valve, to filter
1*	218976421	A	B	C	D	E	F	Tube-water inlet, valve to door
1*	218976915	A	B	C	D	E	F	Tube-water inlet, inlet valve, to I/M inlet
1*	240561702	A	B	C	D	E	F	Seal-water inlet, inlet valve, to ice maker
2	5304459922	A	B	C	D	E	F	Spring, shut-off arm
4	5304458380	A	B	C	D	E	F	Gear
5	5304458383	A	B	C	D	E	F	Plate-mounting
6	5304458386	A	B	C	D	E	F	Screw
7 #	5304458382	A	B	C	D	E	F	Motor-ice maker Svo
8	5304458388	A	B	C	D	E	F	Spacer-hold switch
9	5304456662	A	B	C	D	E	F	Cam
11 #	5304458400	A	B	C	D	E	F	Thermal Cutoff, ice maker
12	5304458379	A	B	C	D	E	F	Harness-wiring
13	5304456665	A	B	C	D	E	F	Thermostat, ice maker
14	5304458384	A	B	C	D	E	F	Screw
15 #	5304456667	A	B	C	D	E	F	Switch-micro, (3)
16	5304458395	A	B	C	D	E	F	Housing, control
17	5304456669	A	B	C	D	E	F	Mold-ice maker, w/therm cut off
18	5304458377	A	B	C	D	E	F	Ejector-ice
18*#	240352601	A	B	C	D	E	F	Wiring Harness, internal, with plug
19	5304458378	A	B	C	D	E	F	Cup-water inlet
21	5304458390	A	B	C	D	E	F	Ice Stripper
22	5304458375	A	B	C	D	E	F	Shut-off Arm
23	5304458394	A	B	C	D	E	F	Screw
24	5304458391	A	B	C	D	E	F	Lever Arm
25	5304456676	A	B	C	D	E	F	Screw, M 4x12.8 #2, lever arm/sprt
27	5304458385	A	B	C	D	E	F	Screw
29	5304458393	A	B	C	D	E	F	Screw
30	5304458387	A	B	C	D	E	F	Screw
31	5304458381	A	B	C	D	E	F	Insulator
32	5304456681	A	B	C	D	E	F	Plate-valve switch
33	5304458403	A	B	C	D	E	F	Retainer-thermostat
34	5304456678	A	B	C	D	E	F	Screw, M 3x12 #3, (2)
35	5304456684	A	B	C	D	E	F	Screw
36	5304458376	A	B	C	D	E	F	Cover-ice maker
37	5304456682	A	B	C	D	E	F	Spring, timing adjust
38	5304458398	A	B	C	D	E	F	Clip
39	5304458399	A	B	C	D	E	F	Conductor-heat
40	5304458401	A	B	C	D	E	F	Clip-retainer
41	5304458389	A	B	C	D	E	F	Screw
42	218515403	A	B	C	D	E	F	Clip-grille
43	241720601	A	B	C	D	E	F	Extension
45	5304455650	A	B	C	D	E	F	Screw, hex washer head, 8-15A x 0.625, Low Profile
51	241796402	A	B	C	D	E	F	Tube-water fill, extension

Functional Parts
* Non-Illustrated Parts

ICE MAKER

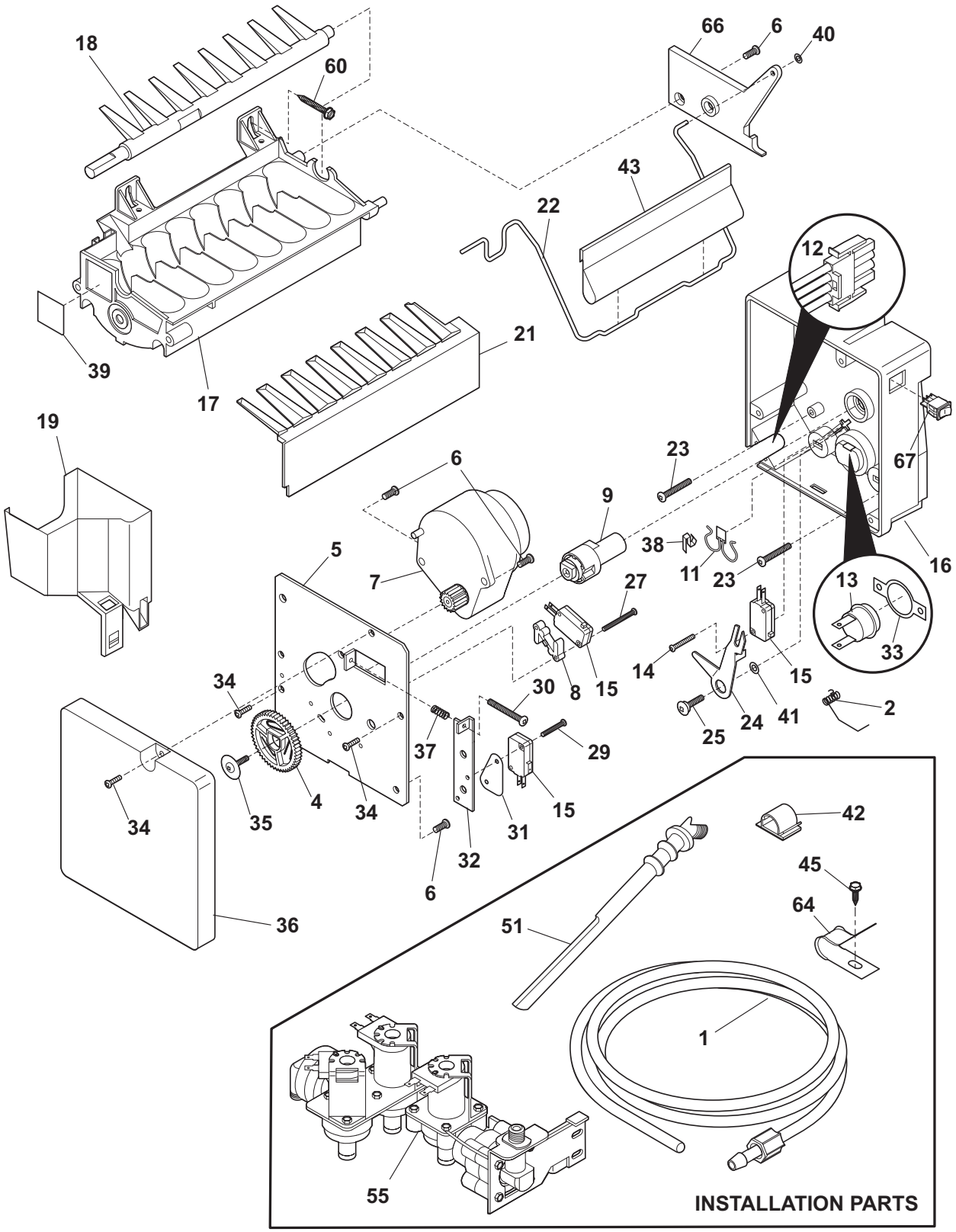

E58I115T

ICE MAKER

Model Index:
A EI23CS55G (EI23CS55GB0)
B EI23CS55G (EI23CS55GB1)
C EI23CS55G (EI23CS55GS0)
D EI23CS55G (EI23CS55GS1)
E EI23CS55G (EI23CS55GW0)
F EI23CS55G (EI23CS55GW1)

POS. NO	PART NO.							DESCRIPTION
55 #	241734301	A	B	C	D	E	F	Valve-water, triple solenoid
55*	218709101	A	B	C	D	E	F	Screw, hex head, 10-32 x 0.500
55*	240363602	A	B	C	D	E	F	Screw-shoulder
55*	240542901	A	B	C	D	E	F	Cap-water valve
60	5304455651	A	B	C	D	E	F	Screw, hex washer head, 8-15A x 0.500
64	5304455846	A	B	C	D	E	F	Clamp, .31 ID, steel, water tube
66	5304458374	A	B	C	D	E	F	Bracket-ice maker
67	5304458392	A	B	C	D	E	F	Switch-on/off
*	240352102	A	B	C	D	E	F	Connector-water, straight
*	241583301	A	B	C	D	E	F	Deflector-air, ice maker
*	5304456660	A	B	C	D	E	F	Screw, M 4x6 #2
*	5304456689	A	B	C	D	E	F	Washer, nylon
* #	241709801	A	B	C	D	E	F	Ice Maker, radius cube, 115 V, no instl parts

Functional Parts
* Non-Illustrated Parts

WIRING SCHEMATIC

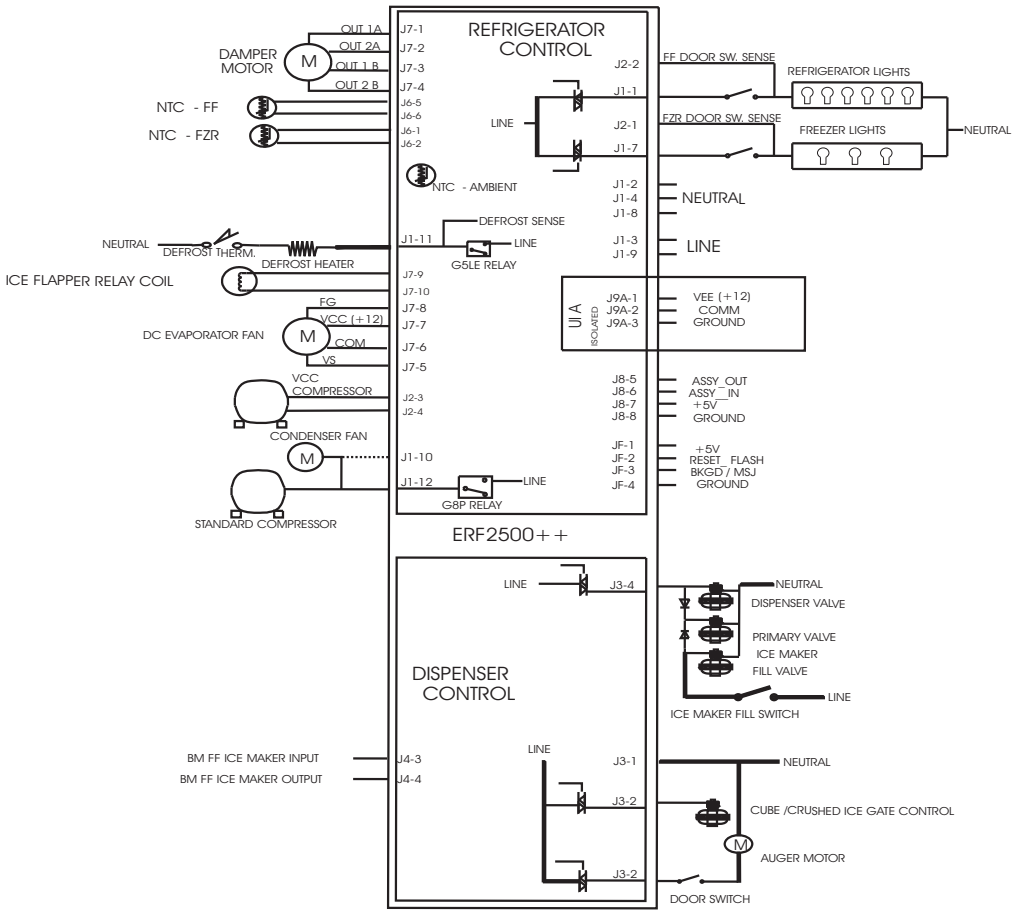

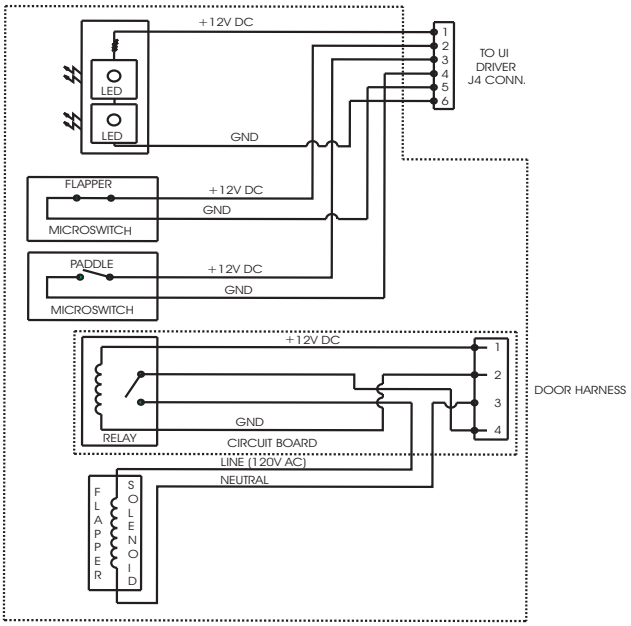

ICE & WATER DISPENSER MODULE

WIRING DIAGRAM

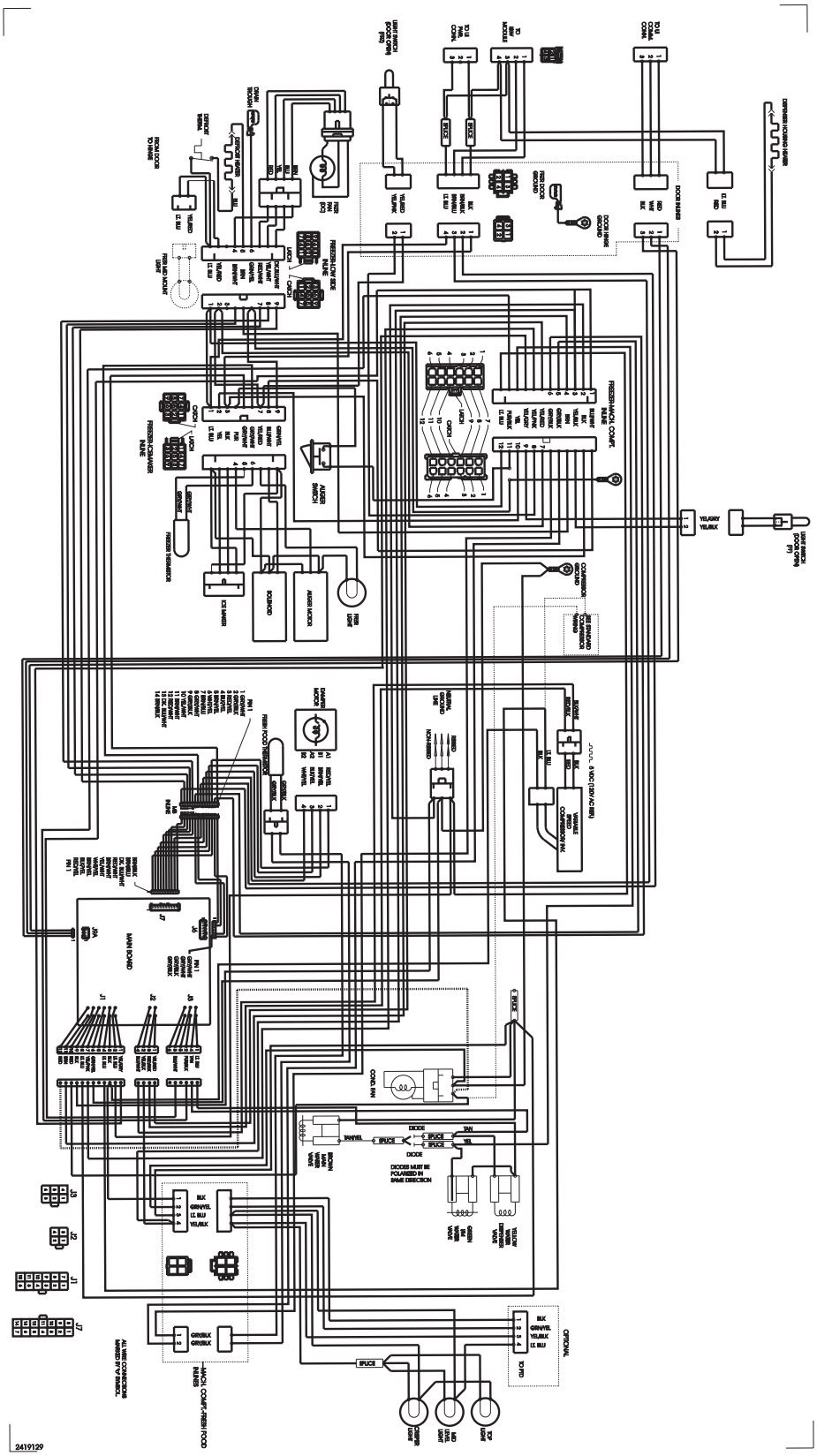
DOOR SWITCH (FOOD CENTER)
ICE LIGHT
FRESH FOOD LIGHT
DOOR SWITCH (FRESH FOOD)
DOOR MARKER
DOOR MARKER
DOOR MARKER